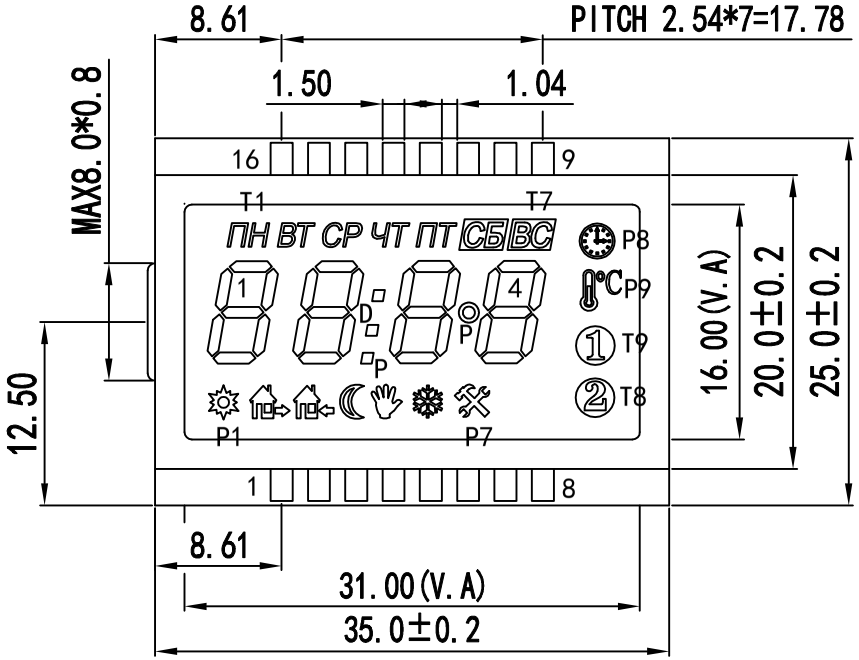

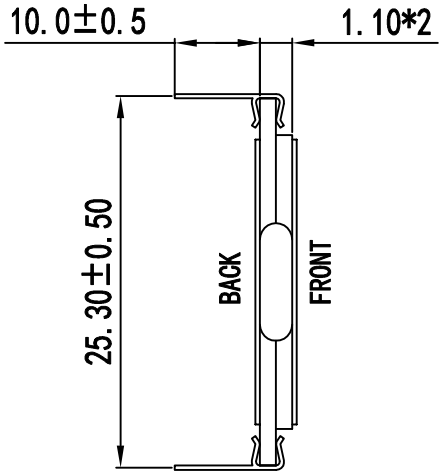

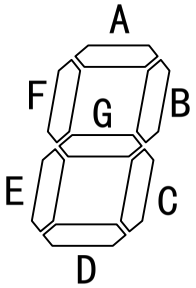

DISPLAY

PIN	1	2	3	4	5	6	7	8	9	10	11	12	13	14	15	16
COM1	T1	1A	T2	T3	2A	T5	3A	4A	P8	T7	T6	T4	COM1			
COM2	1F	1G	1B	2F	2G	3F	3G	4G	4B	4F	3B	2B		COM2		
COM3	1E	1D	1C	2E	2D	3E	3D	4D	4C	4E	3C	2C			COM3	
COM4	P1	P2	P3	P4	P5	P6	P	T9	P9	T8	P7	D				COM4

DISPLAY MODE	TN/POSITIVE/TRANSFLECTIVE	DUTY 1/4	BIAS 1/3	4							
VIEWING ANGLE	12:00 O'CLOCK	SAMPLE	Yes ☐ No ■	3							
DRIVING VOLTAGE	3.0V	APPLICATION:		2			MODEL NO	FP-1151P	DWN: WJY 20061207	UNIT	mm
OPERATING TEMP	-5° C TO 55° C	INSTRUMENT ☐ HOME APPLIANCESS ☐ AIR-CONDIDION ☐		1			CUSTOMER NO		CHK:	SCALE	1 :1
STORAGE TEMP	-10° C TO 60° C	TELEPHONE ☐ AUTOMOBILE ☐		WER	MODIFY CONTENTS	NAME/DATE	CUSTOMER		APP:	SHEET	SHEET 1 OF 2
CONNECTOR	PIN	OTHER ☐		CROSSING POINTS IN THE VIEW:YES ☐ NO ■			TOLERANCES UNLESS OTNERWISE STATED X:±0.10 XX:±0.20 ANGLE±0.1°				